# CITY OF SUN VALLEY
# PLANNING AND ZONING COMMISSION
# AGENDA REPORT

**To:** Planning and Zoning Commission

**From:** MH Mark Hofman, Community Development Director

**Meeting Date:** September 11, 2014

**Agenda Item:** **Weyyakin Entry Signage and Landscaping Design Review Application No. DR 2014-28**

---

**SUBJECT:** Public hearing for a design review application proposing replacement landscaping, stone columns, lighting, and a new monument sign at the Elkhorn Road entryway to the Weyyakin Subdivision to provide greater visibility and recognition to the entryway. **Applicant:** Jeff Joyner, Sun Country Management, for Weyyakin Ranch Property Owner's Association, Inc. **Application Filing Date:** August 7, 2014. **Location:** Entry easement for the Weyyakin Subdivision at Elkhorn Road near Lane Ranch.

**BACKGROUND:** The Weyyakin Ranch Property Owner's Association proposes an upgrade project for the subdivision's second entrance on Elkhorn Road that includes replacement of the existing street and stop signs, removal of two groupings of existing Aspen trees, removal of an existing entry gate, placement of new landscaping, installation of four (4) stone clad columns, and construction of a new entry monument sign. The existing landscaping proposed to be removed will be replaced with four (4) new Tartan Maple trees, nine (9) new Spruce trees, and twelve (12) new Chokecherry trees. New perennials, shrubs and grasses will also be added in key locations to accent the entryway. No new exterior lights or uplighting will be added to the entry but the proposed stone columns will include an LED strip routed into the stone caps and the new monument sign will be internally lit with LED lighting.

**ANALYSIS:** As per Section 9-3F-3A of the Sun Valley City Code, all permanent signs are subject to review and approval by the Planning and Zoning Commission. A design review approval of the proposed project and a noticed public hearing is required. The applicant has submitted project drawings depicting all proposed site alterations and additions to the Weyyakin second entry off Elkhorn Road. The proposed monument sign is visually depicted in attached **Exhibit "PZ-B"**. The Weyyakin Subdivision is currently zoned as Cluster Single-Family Residential (RS-2) and is nearly fully developed with townhome clusters and detached single family dwellings. The private street and driveway system for the development is fully constructed and in place. The alterations proposed for the Weyyakin second entry is to provide greater visibility and site enhancement to owners, guests, and emergency vehicles. The project drawings are attached to this staff report as **Exhibit "PZ-C"**.

**Development Standards-** The proposed entryway upgrade project meets all of the dimensional standards listed in Title 9, Chapter 2, Article A for development in the RS-2 Zoning District. The standards in Table 9-2A-2 are not applicable to the elements of the proposed project design for such criteria as density, lot size, lot dimensions, frontage, building height, and open site area. The project adds no new units, significant structures, new roads, etc to the developed residential site.

**Monument Signs-** The upgrade project includes a new monument sign to be located on the Weyyakin access easement existing over Sun Valley Water and Sewer District (SVW&SD) property. The new monument sign will be placed on the northeast corner of the entry intersection and will consist of an 8'7" wide by 1'10" high (15.77 square feet) metal sign set upon a stone base with surrounding accent landscaping. No monument sign exists at the Elkhorn Road entry and the new sign will match the recently approved and installed sign at the subdivision's Highway 75 entrance. Major subdivisions with two major entries are permitted by City Code to have two entry monument signs. The sign area of 15.7 square feet complies with the maximum of sixteen (16) square feet for entry signs to major subdivisions. The overall height of the sign (4 feet plus depending on grade) does not exceed the maximum allowed height of ten feet. The proposed sign's indirect, interior LED lighting is permissible for such entry signs.

**Exterior Lighting-** The project involves no exterior lighting other than the internal LED lighting of the new monument sign and the LED strip routed into the stone caps of the four entry columns. No LED lighting will be directly visible and all light will be captured directly onto the stone elements in compliance with the exterior lighting regulations of the City Code.

**Street Signs-** The proposed new street signs for the private cul-de-sac entries are conditioned to be consistent with the public street sign standards of the City of Sun Valley. The project drawings depict a new stop sign placed onto a 6" by 6" wood pole with a standard brown format street sign. City standards require that these two signs not be placed on the same pole for safety and visibility reasons. The project is conditioned to require that the new street sign and stop sign be placed on separate wood poles in consultation with the City's Streets Department.

**Design Review Findings and Evaluation Standards-** The required Findings for action on a Design Review application are specified in Development Code Section 9-5B-3 and the Evaluation Standards are contained in Section 9-3A-3. Suggested findings are contained in the Draft Findings of Fact, Conclusions of Law and Conditions of Approval for Design Review Application No. DR 2014-28 attached to this Report as **Exhibit "PZ-A"**. All proposed features of the entryway and cul-de-sac upgrade project comply with applicable standards and criteria for residential developments, landscaping, street improvements, exterior lighting and signs within the RS-2 Zoning District.

**Application Review and Comment-** The project design and application materials were reviewed by the Community Development Director, Building Official, and the Fire Department for conformance with all applicable codes, requirements and regulations. The Fire Department and the Building Official had no comments or conditions regarding the proposed entry signage and landscaping project.

**Public Notice and Comment-** The project application was publicly noticed by: 1.) publication in the Mtn. Express on August 27, 2014; 2.) posting on the project site; 3.) mailing of notice to all property owners within a minimum 300 foot radius of the site; 4.) posting of notice in five prominent public places in the City, including Sun Valley City Hall, Sun Valley Post Office, Elkhorn Springs Store Post Office, St. Thomas Episcopal Church and the Elkhorn Fire Station; 5.) electronic notification to all parties who have notified the City of interest to receive agendas and notices; and, 6.) posting of the notice on the City's web site. No public email comments, phone calls or letters have been received by staff as of the writing of this Report.

**Alternative Actions-** Alternative actions available to the Commission include: (1) make the required findings and adopt the attached draft Findings of Fact and Conclusions of Law (**Exhibit "PZ-A**") approving the design review application; (2) continue the public hearing for further information and review; or (3) close the public hearing, discuss the findings, vote to deny the application and direct staff to return on a date certain with a resolution of denial reflecting the comments and findings of the Commission.

**RECOMMENDATION:** Before public comment is received, the Commission should disclose all information and contacts received outside the public hearing on this item upon which the decision will be based, receive public testimony, and consider the facts and findings necessary to make a decision on the application. The Community Development Director recommends the Commission review the project drawings, hold the public hearing, discuss any remaining issues, and take action to **approve** the design review application.

**LIST OF ATTACHED EXHIBITS:**

| | |
|---|---|
| Exhibit "PZ-A" | Draft Findings of Fact, Conclusions of Law and Conditions of Approval for Design Review Application No. DR 2014-28. |
| Exhibit "PZ-B" | Color photo of an example of the proposed monument sign consisting of one (1) sheet stamped received by the Community Development Department on August 28, 2014. |
| Exhibit "PZ-C" | Reduced 11" by 17" project drawing set consisting of five (5) sheets stamped received by the Community Development Department on August 28, 2014. |

**The entire administrative record for this Design Review application is available for review in the Community Development Department at City Hall.

# (DRAFT) FINDINGS OF FACT AND CONCLUSIONS OF LAW
# CITY OF SUN VALLEY
# PLANNING AND ZONING COMMISSION
# DESIGN REVIEW

Project Name: **Weyyakin Entry Signage and Landscaping at Elkhorn Road**

Applicant: **Jeff Joyner, Sun Country Management, for Weyyakin Ranch Property Owner's Association, Inc.**

Location: **Weyyakin Drive at Elkhorn Road**

Zoning District: **Cluster Single-Family Residential (RS-2) Zoning District**

**Entry Sign Area Calculation:**

| | **Area (sq. ft.)** |
|---|---|
| Proposed Sign | 15.7 |
| Max Permitted | 16 |

Setbacks: All sign elements will be located on Weyyakin Subdivision property and comply with all applicable setback and line-of-site standards .

Building Footprint Allowed: N/A

Entry Sign Height Allowed: 10 feet maximum.

Proposed Sign Height: 4'6" above existing record grade.

**Project Description:** The Weyyakin Ranch Property Owner's Association submitted an application for design review approval for an upgrade project for the subdivision's second entrance on Elkhorn Road that includes replacement of the existing street and stop signs, removal of two groupings of existing Aspen trees, removal of an existing entry gate, placement of new landscaping, installation of four (4) stone clad columns, and construction of a new entry monument sign. The existing landscaping to be removed will be replaced with four (4) new Tartan Maple trees, nine (9) new Spruce trees, and twelve (12) new Chokecherry trees. New perennials, shrubs and grasses will also be added in key locations to accent the entryway. No new exterior lights or uplighting will be added to the entry but the proposed stone columns will include an LED strip routed into the stone caps and the new monument sign will be internally lit with LED lighting.

As per Section 9-3F-3A of the Sun Valley City Code, all permanent signs are subject to review and approval by the Planning and Zoning Commission. A design review approval of the proposed project and a noticed public hearing is required. The applicant submitted project drawings depicting all proposed site alterations and additions to the Weyyakin second entry off Elkhorn Road. The Weyyakin Subdivision is currently zoned as Cluster Single-Family Residential (RS-2) and is nearly fully developed with townhome clusters and detached single family dwellings. The private street and driveway system for the development is fully constructed and in place. The alterations proposed for the Weyyakin second entry is to provide greater visibility and site enhancement to owners, guests, and emergency vehicles.

All aspects of the project have been reviewed by the Planning Commission and staff to ensure compliance with all applicable standards including signs, maximum height, grading, landscaping and exterior lighting regulation compliance. The Planning and Zoning Commission conducted a properly noticed public hearing to review the project design and supporting application materials and to take public comment.

**Required Findings:** In order to approve a design review application and based on the standards set forth in **Sun Valley Municipal Code, Title 9, Chapter 5B, Section 3 DESIGN REVIEW,** the Planning & Zoning Commission shall make the following findings:

**1. The proposed design is in conformance with the purpose of the zoning district and all dimensional regulations of that district.** The entryway upgrade project meets all of the dimensional standards listed in Title 9, Chapter 2, Article A for development in the RS-2 Zoning District. The standards in Table 9-2A-2 are not applicable to the upgrade project for such criteria as density, lot size, lot dimensions, frontage, building height, and open site area. The project adds no new units, significant structures, new roads, etc. to the developed residential site. The upgrade project includes a new monument sign to be located adjacent to the north side of Elkhorn Road at the subdivision's second main entryway. The new monument sign will be 8'7" wide and 1'10" high and set upon a stone base with surrounding accent landscaping. The sign area of 15.7 square feet complies with the maximum of sixteen (16) square feet for entry signs to major subdivisions. The overall height does not exceed the maximum allowed height of ten feet. The proposed sign's indirect, interior LED lighting is permissible for such entry signs.

**2. The proposed design is in conformance with the standards for design review as set forth in Chapter 3A DESIGN REVIEW REGULATIONS of this Title.** The upgrade project is in conformance with all applicable standards for design review because the design employs a variation in sign and landscape materials, minimizes grading and exterior lighting, and blends the entry into the surrounding development while retaining high visibility and safety.

**3. The proposed design does not significantly impact the natural, scenic character and aesthetic value of hillsides, ridges, ridgelines, ridge tops, knolls, saddles, and summits in the City.** No negative impact will occur to surrounding natural features because the development will occur on the less constrained, least sloped, most developable RS-2 zoned portion of the Weyyakin Subdivision. No areas of significant slopes over 25% exist on or near the development site. Safe, adequate and direct access will be maintained to the development via the existing road and driveway system. No avalanche hazard area or other significant natural features have been identified on or near the subject property.

**4. The proposed design is in context and complimentary to adjacent properties.** The project complies with all applicable design standards and is in context with and complementary to adjacent properties because the sign and landscaping modifications create visual interest while retaining adequate line-of-site and safety measures.

**5. The proposed design is compatible with the community character and scale of the neighborhood.** The proposed design is compatible with the community character and scale of the neighborhood because the sign and landscape upgrade recognizes and respects the essential character and of the developed Weyyakin Subdivision and enhances the Elkhorn Road corridor.

**6. The proposed design adheres to standards for the protection of health, safety, and general welfare.** All applicable services such as electrical, sewer and water are available to fully serve the project. No site conditions or aspects of design have been identified that would be adverse to the protection of health, safety and general welfare of the community.

**7. The proposed design is of quality architectural character and materials**. The design of

the sign and landscaping upgrade project is of quality architectural character because the design employs a variation in materials, architectural ornament, and a variety of landscaping materials.

**8. The use is not in conflict with the Comprehensive Plan or other adopted plans, policies, or ordinances of the City.** The subject site is designated as Medium Density Residential by the Future Land Use Map of the Comprehensive Plan. The Cluster Single-Family Residential (RS-2) Zoning District implements the Medium Density Residential Land Use Designation and the sign and landscaping upgrade project is consistent with all applicable provisions of the RS-2 Zoning District. The project will have no effect on the residential density of the developed Weyyakin Subdivision.

## CONCLUSIONS OF LAW

That this project does meet the standards for approval under Title 9, Chapter 3A (Design Review Regulations), of the City of Sun Valley Municipal Code provided the below conditions of approval are met. Design review approval shall expire 365 days from the date of approval, unless extended as per Municipal Code Section 9-5A-8.

## CONDITIONS OF APPROVAL

1. **The applicant(s) and their representatives shall comply with all IBC, IFC and applicable City ordinances.**
2. **Site review approval is good for one year from the date of approval, unless extended as per Municipal Code Section 9-5A-8.**
3. **Any requirements and/or approvals of private associations or other entities are the sole responsibility of the property owner.**
4. **Any permits issued during the 10-day appeal period provided for under section 9-3A-4 may be subject to a stop work order in the event of an appeal. Any work commenced during the appeal period shall be at the applicant's own risk.**
5. **A final construction management plan shall be submitted to the Community Development Department at the time of application for a building permit that addresses adjacent site and street preservation and safety, construction parking, material storage, nuisance control (noise, dust, trash, street cleaning and construction fencing) and each issue of concern of the Planning and Zoning Commission addressed as part of the project approval. *Prior to the issuance of a building permit, final review and approval of the construction management plan by the Community Development Director is required.* No construction parking or staging shall occur on the public or private right-of-ways and the site access shall be kept free and clear for emergency vehicle access at all times. Temporary construction fencing shall protect all sensitive areas and surrounding vegetation throughout the development process. Temporary dirt and grading staging areas shall be clearly identified on the construction management plan.**
6. **The subject Design Review Application shall be specific to the project drawings (5 Sheets) stamped received by the City on August 28, 2014 and approved by the Planning & Zoning Commission on September 11, 2014. Any changes or modifications to the approved design shall be reviewed by the Community Development Department pursuant to Code Section 9-5A-10, Substantial Conformance.**
7. **To the satisfaction of the Community Development Director and the Building Official, the applicant shall comply with the landscape plan and related project materials reviewed and approved by the Commission on September 11, 2014. Any new future exterior lighting for the project shall be in conformance with Development Code Section 9-3B, Exterior Lighting Regulations. All nonessential**

**exterior lighting shall be turned off when applicable. Lights shall be on a timer or sensor activated.**

8. **The project drawings show the existing street sign and stop sign to be replaced with a new street sign and stop sign placed on one 6" by 6" wood pole. As part of the project implementation, the street sign and stop sign shall be placed on separate poles for visual and safety purposes to the satisfaction of the City's Streets Department.**

## DECISION

Therefore, the Sun Valley Planning and Zoning Commission approves this Design Review Application No. DR 2014-28.

Dated this 11th day of September, 2014.

_____
Ken Herich, Chairman
Sun Valley Planning and Zoning Commission

_____
Date Findings of Fact Signed

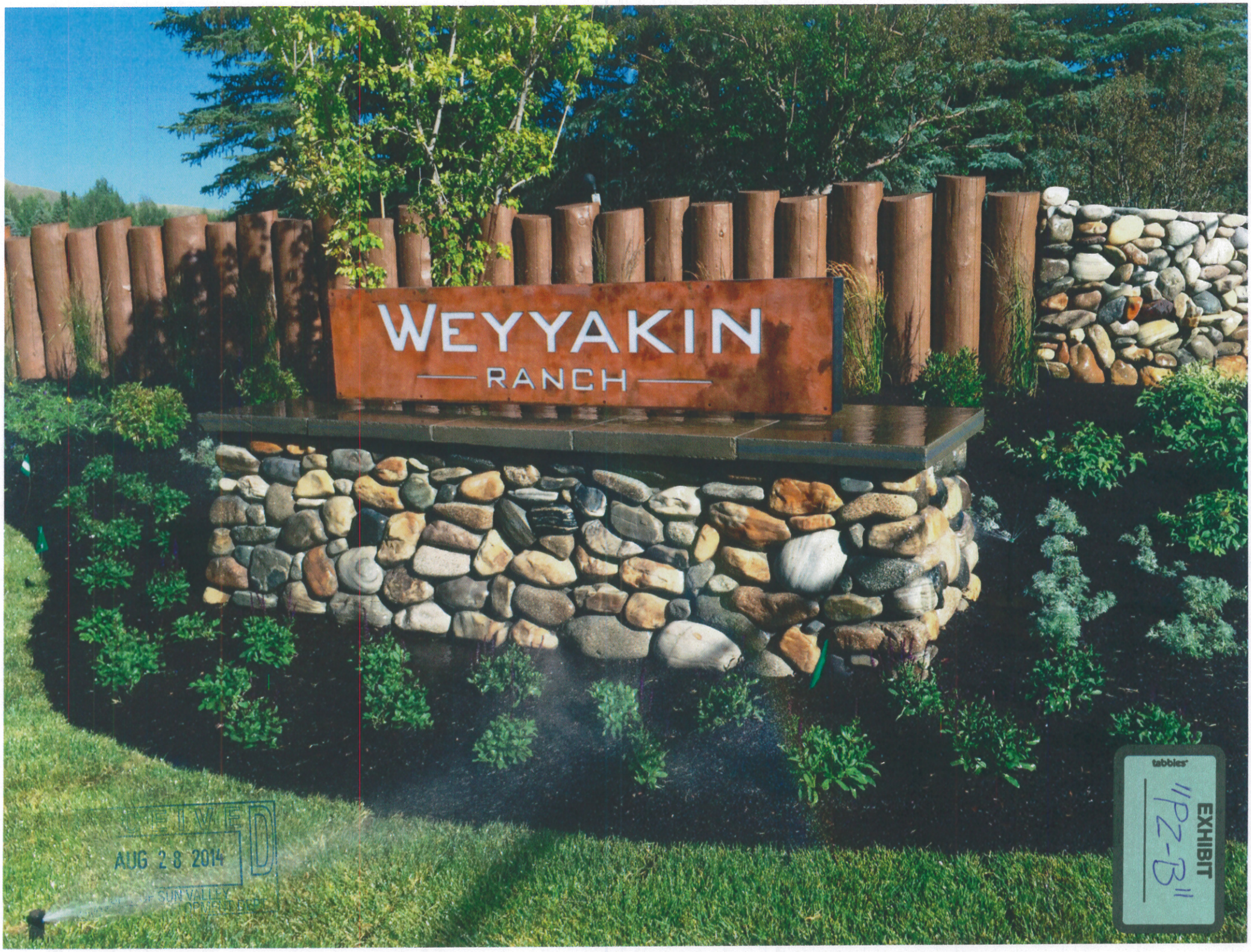


RECEIVED
AUG 28 2014
CITY OF SUN VALLEY
DEVELOPMENT DEPT.

tabbies
EXHIBIT
#PZ-B11

EXHIBIT
"PZ-C"

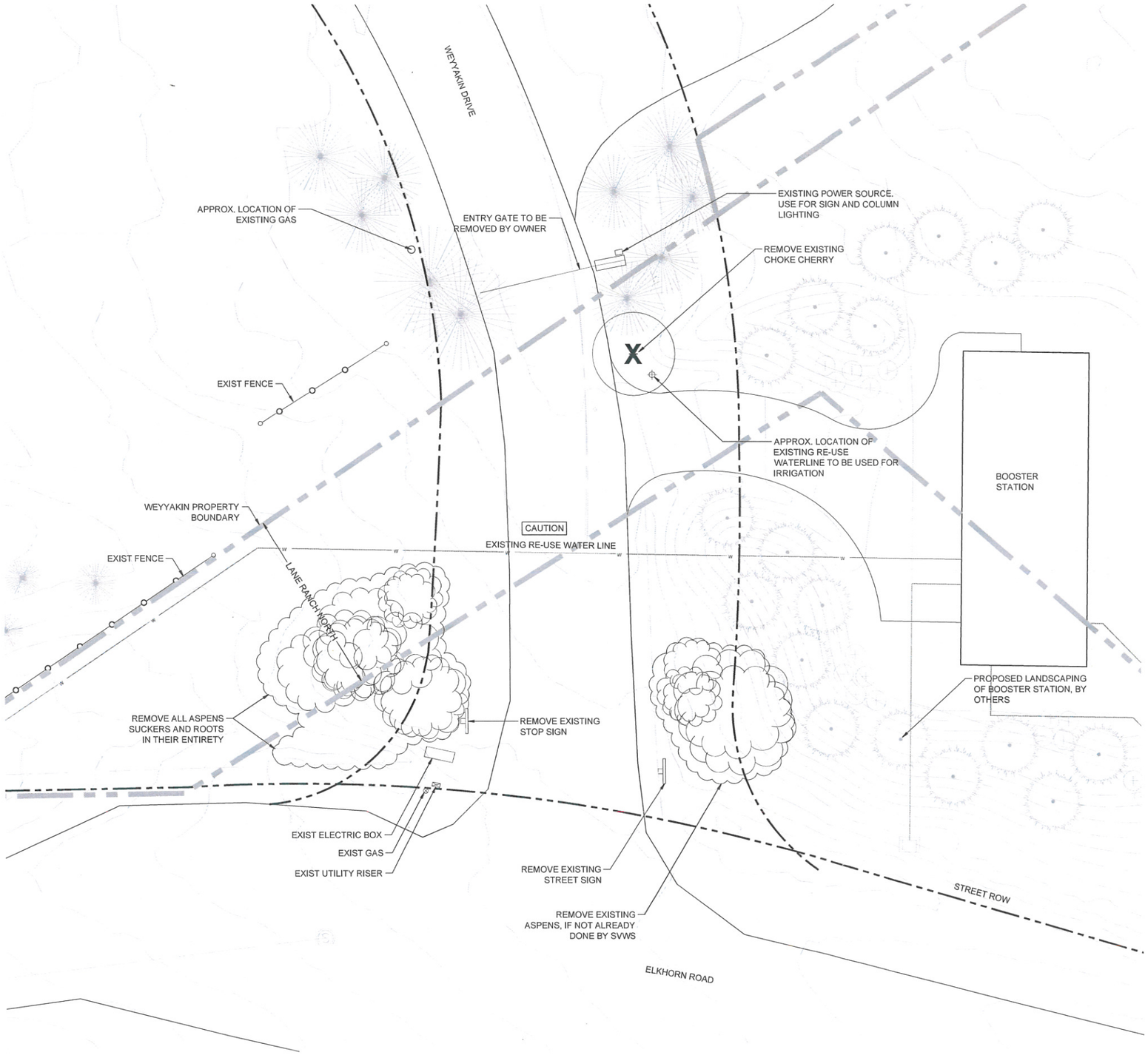


DR 2014-28

RECEIVED
AUG 28 2014
CITY OF SUN VALLEY
COMMUNITY DEVELOPMENT DEPT.

NOTES
1. DO NOT DISTURB OR BUILD OVER THE EXISTING RE-USE WATER LINE.
2. SITE SURVEY HAS BEEN COMPILED FROM INFORMATION PROVIDED BY EGGERS & ASSOCIATES AND SUN VALLEY WATER & SEWER.
3. PROTECT EXISTING UTILITIES FROM DAMAGE DURING CONSTRUCTION.

0' 5' 10' 20' 40'
Graphic Scale: 1" = 10'-0"

CONSTRUCTION SET

REGISTERED LANDSCAPE ARCHITECT NO. 589
MARTY A. LYON
STATE OF IDAHO

Weyyakin Ranch
Sun Valley, Idaho 83353

PROJECT


Lyon Landscape Architects
106 Red Cloud Way
Hailey, ID 83333
208-788-7462
Marty@LyonLA.com


Elkhorn Entry
Demo Plan

| REVISIONS | APPD. |
|---|---|
| | |

L1 OF 5 SHEETS

SCALE: 1"=10'-0" DESIGN: ML
DATE: August 28, 2014 DRAWN: ML
PROJECT: Weyyakin Ranch CHECKED: ML
PROJECT NO: LLA002.14 REVISION NUMBER:

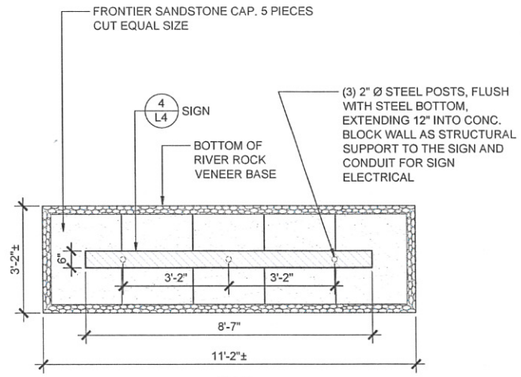


## 1 ENTRY SIGN PLAN
SCALE: 1/2" = 1'-0"

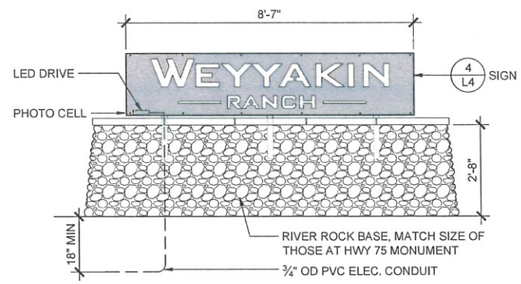


## 2 ENTRY SIGN FRONT ELEVATION
SCALE: 1/2" = 1'-0"

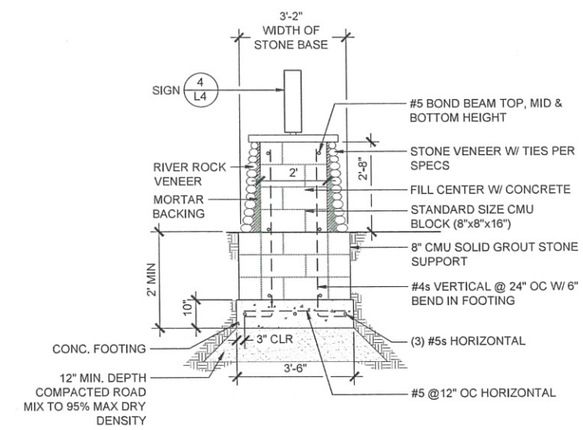


## 3 ENTRY SIGN END SECTION
SCALE: 1/2" = 1'-0"

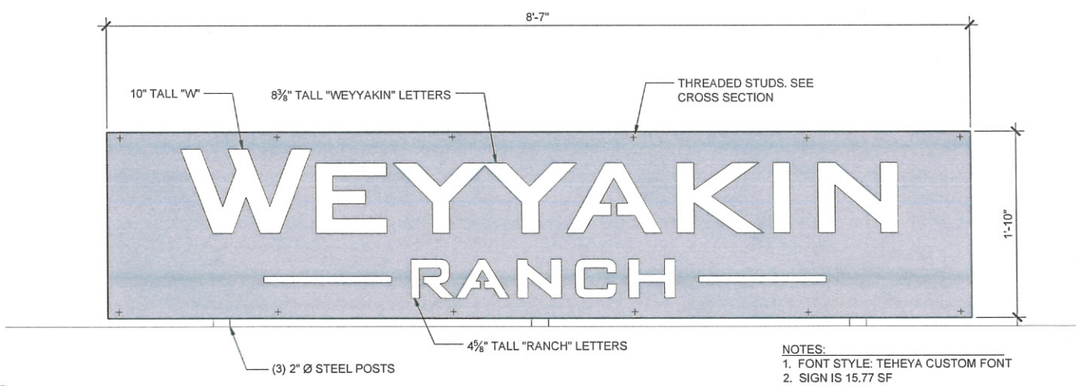


NOTES:
1. FONT STYLE: TEHEYA CUSTOM FONT
2. SIGN IS 15.77 SF

## 4 ENTRY SIGN DETAIL
SCALE: 1 1/2" = 1'-0"

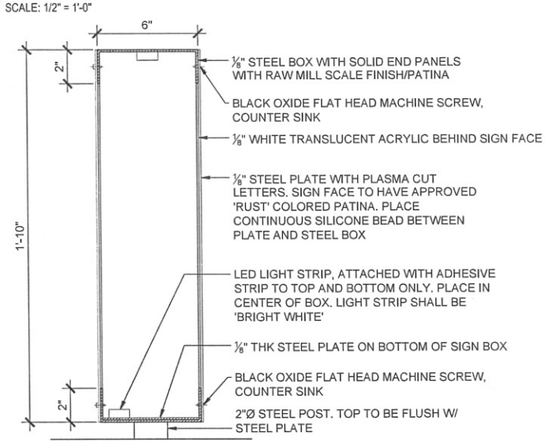


## 5 ENTRY SIGN CROSS SECTION
SCALE: 3" = 1'-0"

NOTE:
MATCH CONSTRUCTION DETAILS, COLOR AND FINISH OF SIGN RECENTLY FABRICATED FOR THE HIGHWAY 75 ENTRANCE

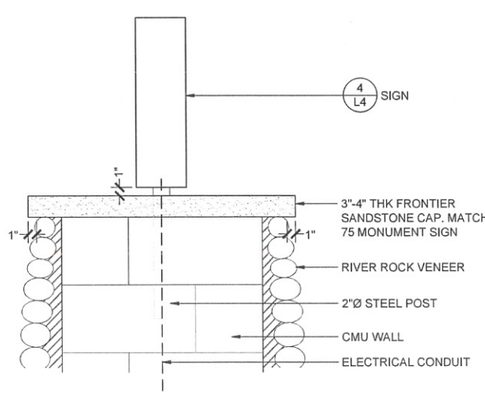


## 6 ENTRY SIGN STONE CAP DETAIL
SCALE: 1 1/2" = 1'-0"

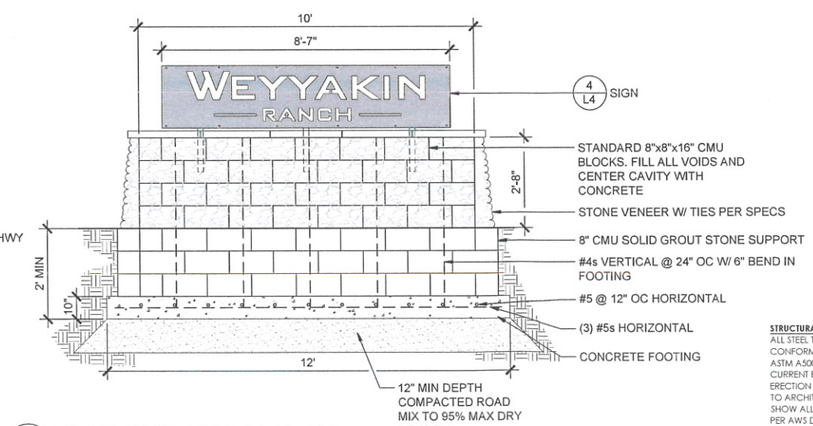


## 7 ENTRY SIGN FRONT SECTION
SCALE: 1/2" = 1'-0"

**STRUCTURAL STEEL AND MISCELLANEOUS METALS:**
ALL STEEL TO CONFORM TO ASTM A36 UNLESS OTHERWISE NOTED. STEEL PIPE SHALL CONFORM TO ASTM A501 (Fy=36ksi). STRUCTURAL STEEL TUBES SHALL CONFORM TO ASTM A500, GRADE B (Fy=46ksi). ALL WORK SHALL BE IN ACCORDANCE WITH THE CURRENT EDITION OF AISC "SPECIFICATIONS FOR THE DESIGN, FABRICATION AND ERECTION OF STRUCTURAL STEEL FOR BUILDINGS". SHOP DRAWINGS SHALL BE SUBMITTED TO ARCHITECT/ENGINEER FOR REVIEW BEFORE FABRICATION. SHOP DRAWINGS SHALL SHOW ALL WELDING WITH AWS A2.4 SYMBOLS. ALL WELDING SHALL BE PERFORMED PER AWS D1.1 WITH A MINIMUM WELD SIZE OF 3/16" AND WITH E70 ELECTRODE. MACHINE BOLTS SHALL BE ASTM A325 UNLESS NOTED OTHERWISE ON DRAWINGS. PROVIDE LOAD INDICATOR WASHERS BETWEEN NUT AND CONNECTED STEEL OR EQUIVALENT TENSIONING INDICATOR . ALL STEEL ANCHORS, TIES AND OTHER MEMBERS EMBEDDED IN CONCRETE OR MASONRY SHALL BE LEFT UNPAINTED. ALL STEEL, INCLUDING NUTS, BOLTS, AND WASHERS EXPOSED TO WEATHER SHALL BE GALVANIZED.

**STRUCTURAL SPECIFICATIONS FOR SIGN FOUNDATIONS and BASE CONNECTIONS:**
ANY DISCREPANCIES FOUND AMONG THE DRAWINGS, SPECIFICATIONS, AND NOTES SHALL BE REPORTED TO THE ARCHITECT/ENGINEER FOR CLARIFICATION. THE CONTRACTOR SHALL VERIFY AND COORDINATE DIMENSIONS AMONG ALL DRAWINGS PRIOR TO PROCEEDING WITH ANY WORK OR FABRICATION.

CONTRACTOR IS RESPONSIBLE FOR ALL BRACING AND SHORING DURING CONSTRUCTION.

CONTRACTOR TO SUBMIT A REQUEST TO ARCHITECT/ENGINEER FOR ANY SUBSTITUTION OF MATERIALS OR PRODUCTS SPECIFIED ON STRUCTURAL SHEETS.

THE FOLLOWING APPLIES UNLESS OTHERWISE NOTED ON DRAWINGS.

**BUILDING CODE:**
STRUCTURAL DESIGN AND CONSTRUCTION TO CONFORM TO THE INTERNATIONAL BUILDING CODE (IBC), 2012 EDITION.

**LATERAL LOADS:**
WIND DESIGN CRITERIA:
OCCUPANCY CATEGORY II
ANALYSIS PROCEDURE DIRECTIONAL PROCEDURE
WIND SPEED 115 MPH
EXPOSURE B
IMPORTANCE FACTOR Iw 1.0

**FOUNDATIONS:**
DESIGN SOIL BEARING PRESSURE 1500 PSF
ASSUMES SAND, SILTY SAND, CLAYEY SAND, SILTY GRAVEL, OR CLAYEY GRAVEL PER 2012 IBC

ALL FOUNDATIONS SHALL BEAR ON FIRM UNDISTURBED, DRAINED SOIL. IF SOIL IS DISTURBED, COMPACT SOIL IN 6" LIFTS TO 95% MAXIMUM DRY DENSITY PER ASTM D960. CONTRACTOR TO NOTIFY ARCHITECT/ENGINEER IF SOIL CONDITIONS ARE ENCOUNTERED WHICH MAY REQUIRE A LOWER ASSUMED SOIL BEARING PRESSURE SUCH AS CLAYS, SILTS, OR ORGANICS. 2'-0" MINIMUM FOOTING DEPTH BELOW GRADE OR SEE DETAILS.

**CONCRETE:**
STRUCTURAL CONCRETE, INCLUDING FOOTINGS, WALLS, AND SLABS, SHALL HAVE THE FOLLOWING MIX REQUIREMENTS, AND MAX. AGGREGATE SIZE OF 3/4".

28-DAY COMPRESSIVE STRENGTH: 3000 PSI
MINIMUM CONCRETE CONTENT: 5 SACKS PER CUBIC YARD
PERCENT-ENTRAINED AIR: 5% TO 6%
MAXIMUM SLUMP: 4 INCHES

**CONCRETE PLACEMENT:**
ALL CONCRETE PLACEMENT AND REINFORCEMENT COVER SHALL CONFORM TO ACI 318. CONCRETE FORMWORK TO BE OF ADEQUATE STRENGTH AND PROPERLY BRACED TO PREVENT SAGGING OR BULGING. PROTECT ALL CONCRETE FROM FREEZING TEMPERATURES. NO FOOTING SHALL BE PLACED ON DISTURBED SOIL. REINFORCING STEEL SHALL BE CONTINUOUS THROUGH ALL COLD JOINTS. FOOTING STEPS SHALL BE STEPPED (2) VERTICALLY TO (1) HORIZONTALLY. REFER TO DRAWINGS FOR STEP REINFORCEMENT.

**CONCRETE REINFORCEMENT:**
REINFORCEMENT SHALL BE ASTM A615, GRADE 40 FOR #4 BARS AND SMALLER, AND GRADE 60 FOR #5 BARS AND LARGER. WIRE MESH TO CONFORM TO ASTM A185-64. ALL REBAR SPLICES TO BE LAPPED 40 BAR DIAMETER'S UNLESS OTHERWISE NOTED. WELDING OF REBAR TO BE APPROVED BY ENGINEER. PAD AND STEM FOOTING REINFORCEMENT TO HAVE 3" CLEAR COVER OF CONCRETE TYPICAL UNLESS OTHERWISE NOTED ON THE DRAWINGS. RE-BAR INDICATED TO BE WELDED TO BE CERTIFIED WELDABLE RE-BAR

**CONCRETE FOOTINGS, PADS, STEM, BASEMENT, AND RETAINING WALLS:**
REFER TO DRAWINGS FOR WALL SIZE AND REINFORCEMENT. BASEMENT WALLS SHALL NOT BE BACK FILLED UNTIL ATTACHED FLOORS ARE FRAMED AND SHEATHED, AND CONCRETE HAS CURED A MINIMUM OF 7 DAYS. PROVIDE CORNER BARS WITH 24" LEGS AT CORNERS AND INTERSECTING WALLS AND FOOTINGS, SIZE AND PLACEMENT TO MATCH HORIZONTAL REINFORCEMENT. ANCHOR BOLTS SHALL BE ASTM A307 AND OF THE SIZE AND SPACING AS INDICATED ON THE DRAWINGS AND HAVE A 7" MINIMUM EMBEDDMENT DEPTH. ANCHOR BOLTS TO BE WITHIN 1'-0" OF SILL PLATE ENDS, WITH A MINIMUM OF TWO PER WALL, AND NO CLOSER THAN 6" FROM CONCRETE WALL CORNERS. PROVIDE AN ADEQUATE DRAINAGE SYSTEM BEHIND ALL WALLS AS REQUIRED TO NOT ALLOW STANDING WATER BEHIND WALLS. BACK FILL RETAINING WALLS IN SEQUENCE PRESCRIBED ON DRAWINGS AND AFTER CONCRETE HAS CURED A MINIMUM OF 14 DAYS.

**REINFORCED CONCRETE MASONRY UNITS (CMU):**
HOLLOW CONCRETE MASONRY UNITS SHALL CONFORM TO ASTM C90 GRADE N, Fm=1500 PSI. USE TYPE M MORTAR WITH A MINIMUM COMPRESSIVE STRENGTH OF 2500 PSI AT 28 DAYS. GROUT SHALL BE PEA GRAVEL CONCRETE WITH A COMPRESSIVE STRENGTH OF 2800 PSI AT 28 DAYS, AND A MINIMUM SLUMP OF 6". INSTALL CMU OF SIZE, ARCHITECTURAL TYPE, AND REINFORCEMENT AS PER DRAWINGS. SOLID GROUT ALL CELLS BELOW GRADE AND AS SPECIFIED IN DRAWINGS. MAXIMUM HEIGHT FOR GROUT LIFTS IS 4'-0" UNLESS CLEANOUTS ARE USED. CMU WALLS SHALL BE LAID IN RUNNING BOND. MASONRY CONSTRUCTION ABOVE GRADE TO BE INSPECTED PER IBC OR GOVERNING BUILDING DEPARTMENT.

**REINFORCEMENT OF CONCRETE MASONRY UNITS:**
CMU WALLS SHALL BE REINFORCED, UNLESS OTHERWISE NOTED IN DRAWINGS, HORIZONTALLY WITH 8" HIGH BOND BEAMS WITH (2)-#4 BARS CONTINUOUS AT THE TOP OF WALL, EACH OPENING SILL, AT ALL FLOOR AND ROOF DIAPHRAGMS, AND 4'-0" O.C. BETWEEN; VERTICALLY WITH (1)-#4 BAR AT 32" O.C. FULL HEIGHT OF WALL, PLUS (2)-#4 BARS AT EACH JAMB, CORNER, AND AT DISCONTINUOUS ENDS. REINFORCING SPLICES SHALL BE LAPPED A MINIMUM OF 40 BAR DIAMETERS. PROVIDE VERTICAL DOWELS AT ALL FOUNDATIONS OF THE SAME SIZE AND SPACING AS VERTICAL REINFORCEMENT UNLESS OTHERWISE NOTED ON DRAWINGS. PROVIDE 8" DEEP LINTELS WITH (2)-#5 BARS ABOVE OPENINGS 6'-0" OR LESS WIDE, AND 16" DEEP LINTELS WITH (2)-#5 BARS TOP AND BOTTOM ABOVE OPENINGS OVER 6'-0" WIDE. PROVIDE A MINIMUM OF 8" END BEARING FOR ALL LINTELS. GROUT ALL REINFORCED CELLS, BOND BEAMS, AND LINTELS.

**STRUCTURAL GLUED-LAMINATED TIMBER:**
ALL GLUED-LAMINATED TIMBER SHALL BE COMBINATION 24F-V8 WITH ZERO CAMBER UNLESS OTHERWISE NOTED ON DRAWINGS. SEE DRAWINGS FOR GLUED- LAMINATED TIMBER GRADE FOR BEAM'S CONTINUOUS OVER A SUPPORT OR CANTILEVERED. FABRICATION SHALL BE IN ACCORDANCE WITH AITC 117. PROVIDE WET USE ADHESIVES. MAXIMUM MOISTURE CONTENT SHALL BE 15%.

**NAILS, BOLTS, LAGS, AND PRE-FABRICATED CONNECTIONS FOR WOOD:**
ALL NAILS SHALL BE BOX OR GALVANIZED BOX. THE USE OF STAPLES TO BE VERIFIED BY ENGINEER. BOTH BOLTS AND LAGS SHALL CONFORM TO ASTM A307 GRADE UNLESS OTHERWISE NOTED. PROVIDE MILD STEEL PLATE WASHERS AT ALL BOLT HEADS AND NUTS BEARING AGAINST WOOD. METAL HANGERS AND CONNECTIONS SHOWN ON DRAWINGS TO BE MANUFACTURED BY THE SIMPSON COMPANY AND INSTALLED PER THEIR SPECIFICATIONS WITH NAILING PER THEIR SPECIFICATION. OTHER MANUFACTURER'S MAY BE CONSIDERED WHERE LOAD CAPACITY AND DIMENSIONS ARE EQUAL OR BETTER. ALL SUBSTITUTIONS MUST BE SUBMITTED TO THE ARCHITECT/ ENGINEER FOR REVIEW.

**VENEER TIES:**
MASONRY BACKING: .1055" CORRUGATED GALVANIZED STEEL WIRE TIES LAID IN BLOCK MORTAR JOINT WITH LOOPS FORMED PROTRUDING FROM BLOCK AT 1'2" O.C. HORIZONTALLY AND 8" O.C. VERTICALLY. BOTH LEGS OF THE TIES SHALL BE A MINIMUM OF 6" IN LENGTH AND BENT AT RIGHT ANGLES AND LAID IN THE BLOCK MORTAR JOINT. 15" LONG GALVANIZED .1055" WIRE IS TO BE LOOPED THROUGH THE LOOP OF THE VENEER TIES AND EMBEDDED IN THE VENEER MORTAR JOINT. THE WIRE IS TO HAVE A 2" RIGHT ANGLE BEND AT EACH END.

CONSTRUCTION SET

REGISTERED LANDSCAPE ARCHITECT MARTY A. LYON STATE OF IDAHO

Weyyakin Ranch
Sun Valley, Idaho 83353

PROJECT


Lyon Landscape Architects
106 Red Cloud Way
Hailey, ID 83333
208-788-7462
Marty@LyonLA.com


Elkhorn Entry
Sign Details

| REVISIONS | APPD. |
|---|---|

L3 OF 5 SHEETS

SCALE: AS SHOWN DESIGN: ML
DATE: August 28, 2014 DRAWN: ML
PROJECT: Weyyakin Ranch CHECKED: ML
PROJECT NO: LLA0012.14 REVISION NUMBER:

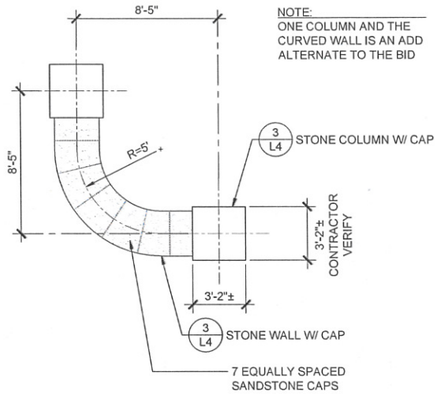


1 STONE WALL & COLUMNS PLAN
SCALE: 1/4" = 1'-0"

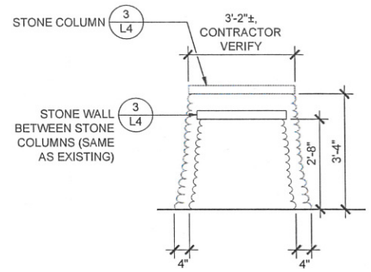


2 STONE WALL / COLUMN ELEVATION
SCALE: 1/2" = 1'-0"

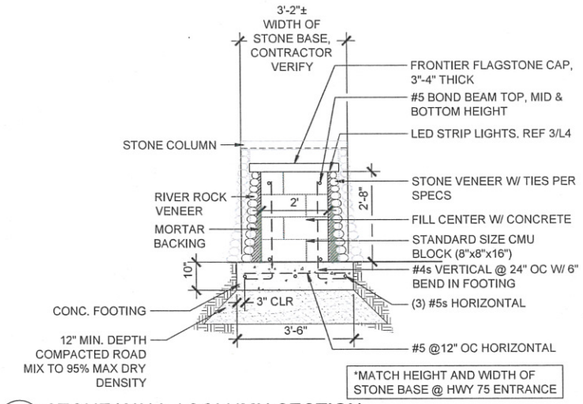


3 STONE WALL / COLUMN SECTION
SCALE: 1/2" = 1'-0"

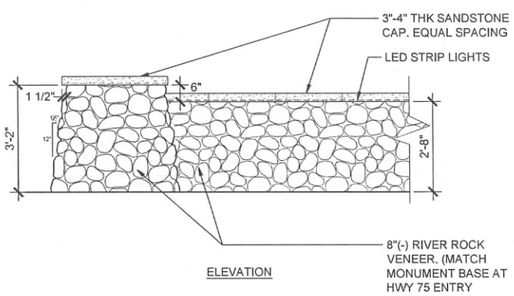


1B STONE WALL / COLUMN ELEVATION
SCALE: 1/2" = 1'-0"

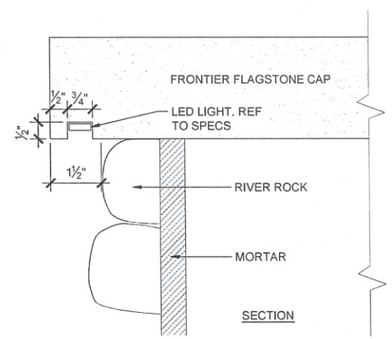


4 LED LIGHT DETAIL WITHIN CAP OF STONE COLUMN
SCALE: 6" = 1'-0"

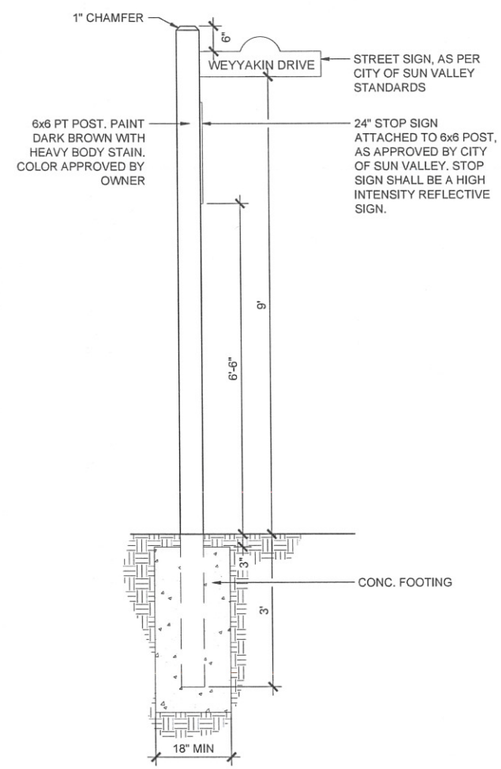


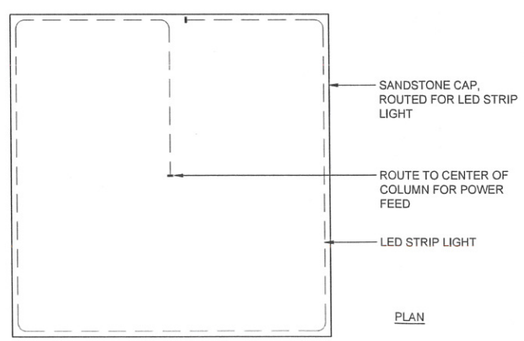


5 LED LIGHT DETAIL WITHIN CAP OF STONE COLUMN
SCALE: 1 1/2" = 1'-0"

6 STOP SIGN / STREET SIGN DETAIL
SCALE: 3/4" = 1'=0"

CONSTRUCTION SET

REGISTERED LANDSCAPE ARCHITECT NO. 589
MARTY A. LYON STATE OF IDAHO

Weyyakin Ranch
Sun Valley, Idaho 83353

PROJECT


Lyon Landscape Architects
106 Red Cloud Way
Hailey, ID 83333
208-788-7462
Marty@LyonLA.com


Elkhorn Entry
Construction Details

| REVISIONS | APPD. |
|---|---|
| | |

L4 OF 5 SHEETS

SCALE: AS SHOWN DESIGN: ML
DATE: August 28, 2014 DRAWN: ML
PROJECT: Weyyakin Ranch CHECKED: ML
PROJECT NO: LLA00/2.14 REVISION NUMBER:

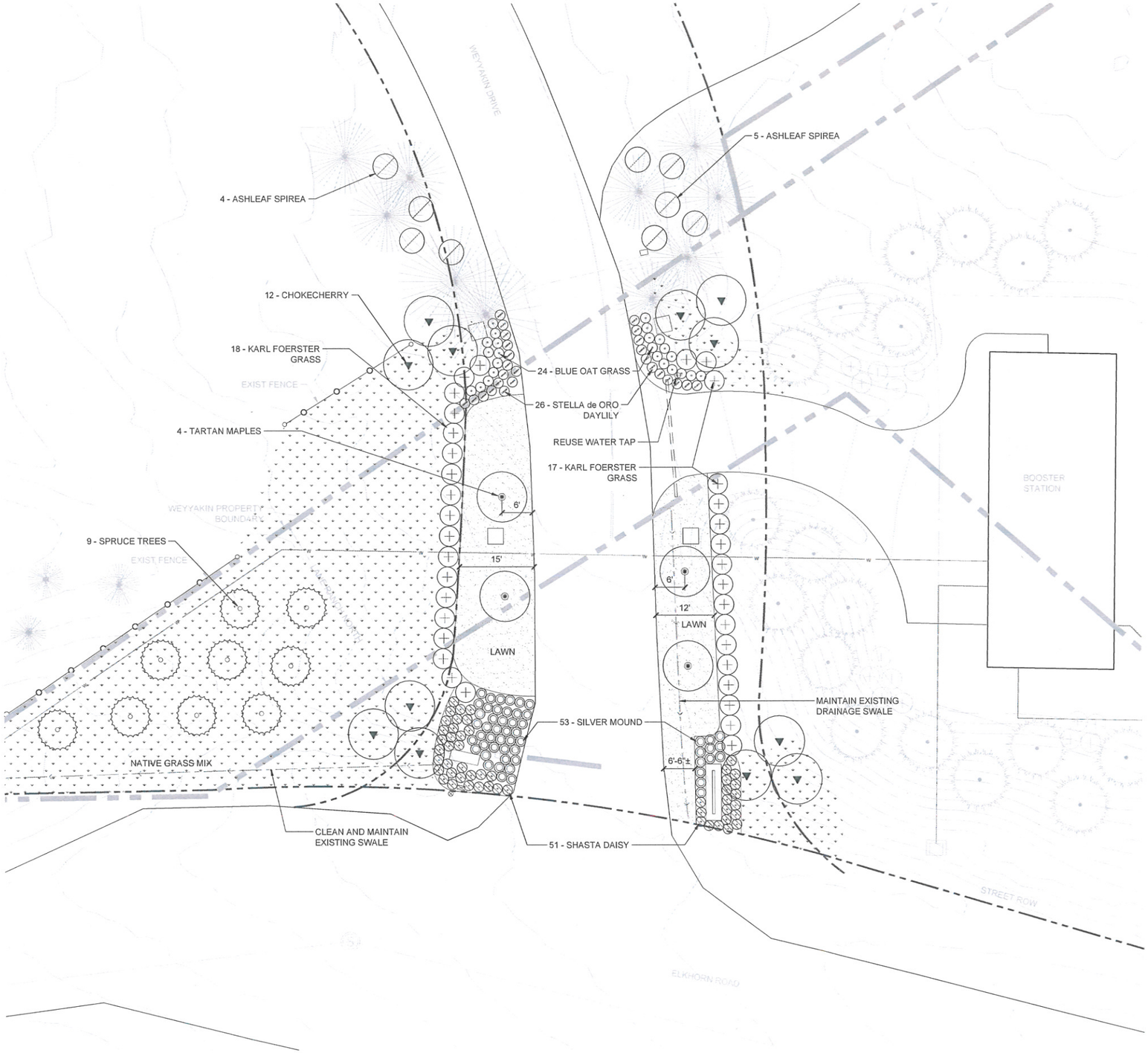


PLANT SCHEDULE

| QTY. | BOTANICAL NAME | COMMON NAME | SIZE & SPACING |
|---|---|---|---|
| TREES | | | |
| 4 | Acer tataricum | Tartan Maple | 8'-10' Tall, B&B Multi-stem |
| 9 | Picea pungens | Colorado Spruce | 6'-8' Tall @ 15' OC |
| 12 | Prunus virginiana | Chokecherry | 6'-8' Tall @ 5' OC 5 gal, Multi-stem |
| PERENNIALS, SHRUBS & GRASSES | | | |
| 35 | Calamagrostis x acutiflora 'karl foerster' | Karl Foerster Grass | 3 gal @ 4' OC |
| 24 | Helictotrichon sempervirens | Blue Oat Grass | 1 gal @ 2' OC |
| 26 | Hemerocallis 'Stella de Oro' | Stella de Oro Daylily | 1 gal @ 2' OC |
| 51 | Leucanthemum x superbum | Shasta Daisy | 1 gal @ 2' OC |
| 53 | Artemisia silver mound | Silver Mound 'Dusty Miller' | 1 gal @ 2' OC |
| 9 | Sorbaria sorbifolia | Ashleaf Spirea | 5 gal @ 6' OC |

NOTES

1. CONTRACTOR SHALL LOCATE AND FLAG THE EXISTING IRRIGATION PRIOR TO NEW CONSTRUCTION.
2. CONTRACTOR SHALL CONNECT TO THE RE-USE WATER LINE TO IRRIGATE THE LANDSCAPE EAST OF THE DRIVE.
3. CULTIVATE EXISTING SOIL IN ALL BEDS TO A MINIMUM OF 6" DEEP. REMOVE ALL ROCKS GREATER THAN 1", ROOTS, VEGETATION AND DEBRIS.
4. LAWN AREAS AND SEEDED AREAS TO RECEIVE 4" COMPACTED DEPTH OF APPROVED TOPSOIL. COMPACT, ROLL AND FINE GRADE PRIOR TO PLACING SOD AND SEEDING.
5. LIMB EXISTING TREES IMMEDIATELY NORTH OF THE EXISTING GATE AS DIRECTED BY THE LANDSCAPE ARCHITECT.
6. RAKE AND REMOVE DEBRIS FROM UNDER THE TREES IMMEDIATELY NORTH OF THE EXISTING GATE.
7. LAYOUT PLANTS AS PER PLAN AND TO THE APPROVAL OF THE LANDSCAPE ARCHITECT.
8. PLANT PITS FOR SHRUBS AND TREES SHALL BE A MINIMUM OF TWICE AS LARGE AS THE ROOT BALL. BACKFILL SHALL BE 50% EXISTING SOIL AND 50% APPROVED TOPSOIL MIX.
9. WHEN PLANTING, FLOOD THE PLANT PIT TO ASSURE THE PLANTS RECEIVE ADEQUATE WATER FOR ESTABLISHMENT.
10. MULCH ENTIRE BEDS WITH 3" DEEP OF SOIL PEP.

0' 5' 10' 20' 40'
Graphic Scale: 1" = 10'-0"

# CONSTRUCTION SET

REGISTERED LANDSCAPE ARCHITECT NO. 259
MARTY A. LYON STATE OF IDAHO

**Weyyakin Ranch**
Sun Valley, Idaho 83353

PROJECT


**Lyon Landscape Architects**
106 Red Cloud Way
Hailey, ID 83333
208-788-7462
Marty@LyonLA.com


**Elkhorn Entry Planting Plan**

REVISIONS | APPD.

L5 OF 5 SHEETS

SCALE: 1"=10'-0" DESIGN: ML
DATE: August 28, 2014 DRAWN: ML
PROJECT: Weyyakin Ranch CHECKED: ML
PROJECT NO: LLA0012.14 REVISION NUMBER: